MAIN C.B.A.

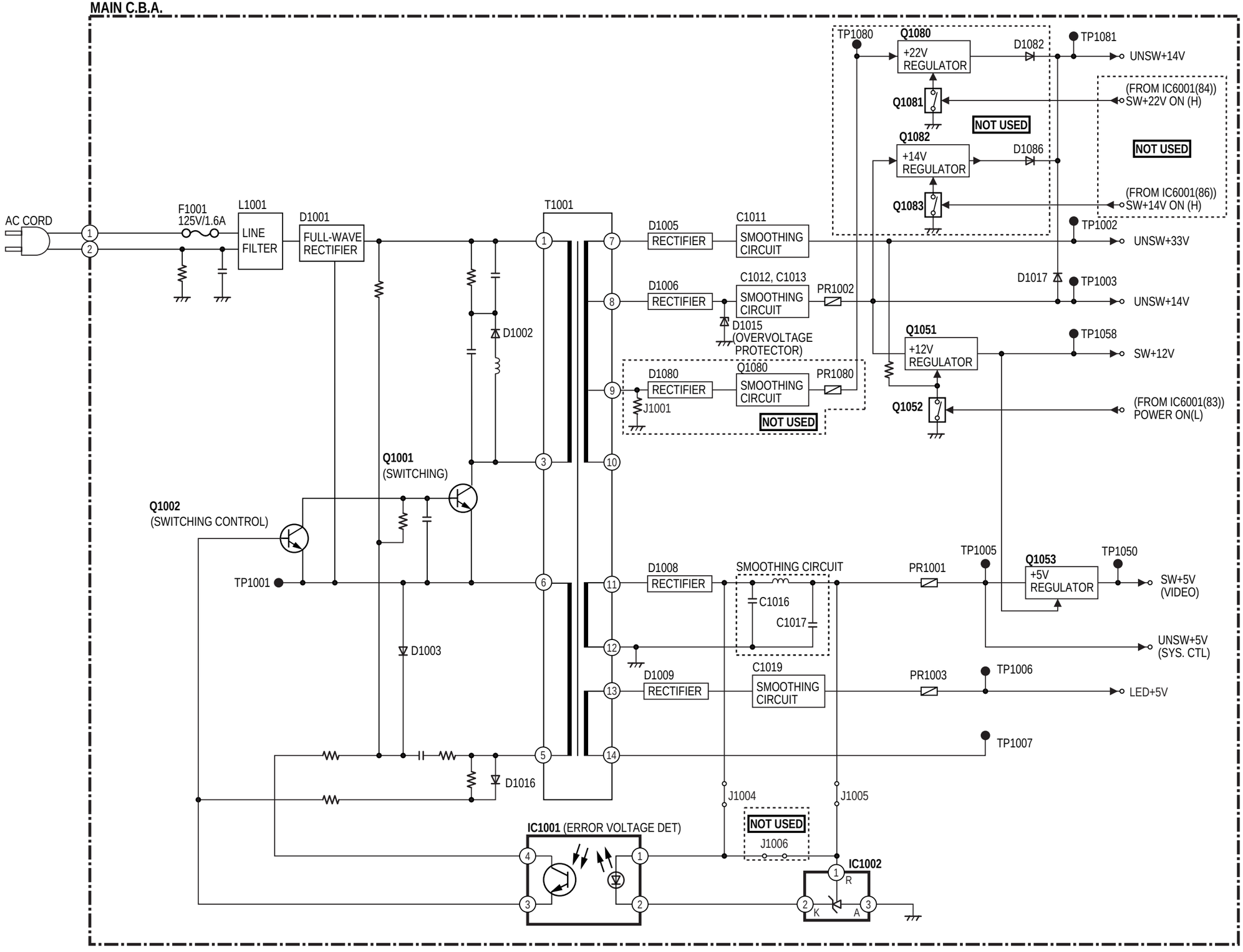
AC CORD
F1001
125V/1.6A
L1001
LINE FILTER
D1001
FULL-WAVE RECTIFIER
T1001
D1002
Q1001
(SWITCHING)
Q1002
(SWITCHING CONTROL)
TP1001
D1003
D1016
D1005
RECTIFIER
C1011
SMOOTHING CIRCUIT
D1006
RECTIFIER
C1012, C1013
SMOOTHING CIRCUIT
PR1002
D1015
(OVERVOLTAGE PROTECTOR)
D1080
RECTIFIER
Q1080
SMOOTHING CIRCUIT
PR1080
J1001
NOT USED
TP1080
Q1080
+22V REGULATOR
D1082
TP1081
UNSW+14V
Q1081
(FROM IC6001(84))
SW+22V ON (H)
NOT USED
Q1082
+14V REGULATOR
D1086
NOT USED
Q1083
(FROM IC6001(86))
SW+14V ON (H)
TP1002
UNSW+33V
D1017
TP1003
UNSW+14V
Q1051
+12V REGULATOR
TP1058
SW+12V
Q1052
(FROM IC6001(83))
POWER ON(L)
D1008
RECTIFIER
SMOOTHING CIRCUIT
C1016
C1017
PR1001
TP1005
Q1053
+5V REGULATOR
TP1050
SW+5V
(VIDEO)
UNSW+5V
(SYS. CTL)
D1009
RECTIFIER
C1019
SMOOTHING CIRCUIT
PR1003
TP1006
LED+5V
TP1007
J1004
J1005
NOT USED
J1006
IC1001 (ERROR VOLTAGE DET)
IC1002
R
K
A